CHANGE 2

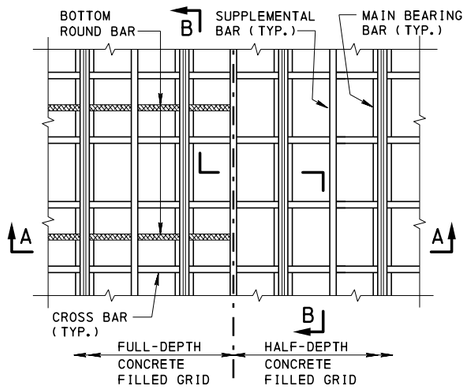

PLAN VIEW

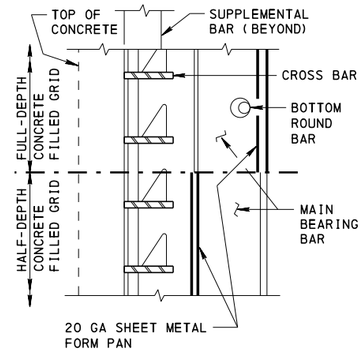

SECTION B-B

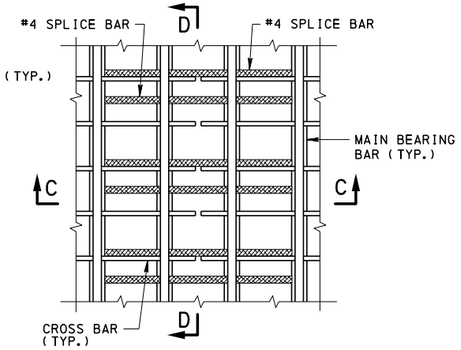

WELDLESS PLAN VIEW

BOTTOM ROUND BAR NOT SHOWN FOR CLARITY

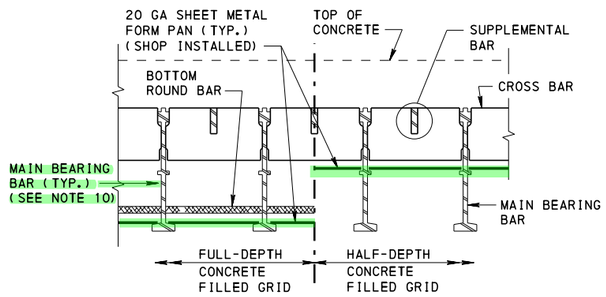

SECTION A-A

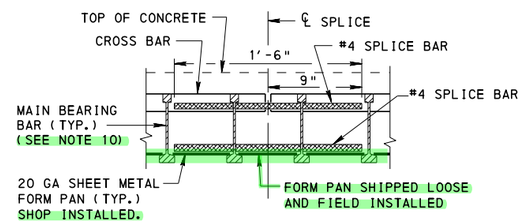

SECTION C-C

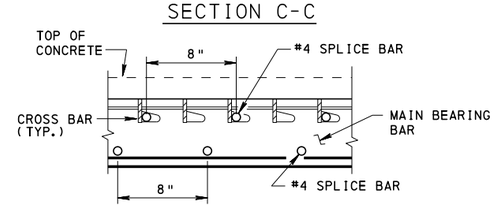

SECTION D-D

TYPICAL GRID DECK DETAILS

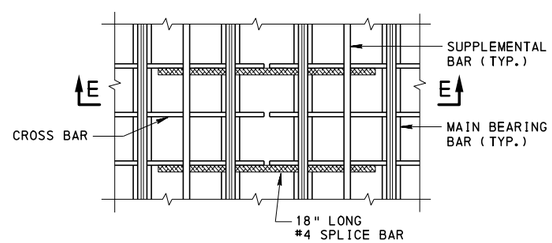

PLAN

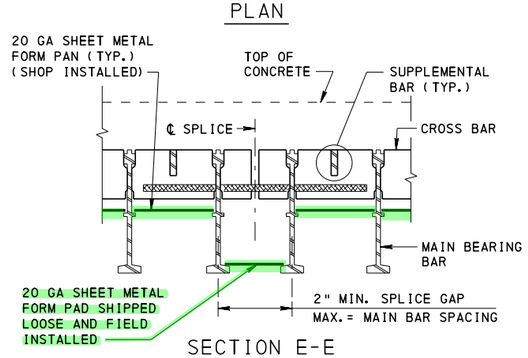

SECTION E-E

HALF DEPTH CONCRETE GRID TRANSVERSE SPLICE BETWEEN PANELS

FULL DEPTH CONCRETE GRID TRANSVERSE SPLICE BETWEEN PANELS

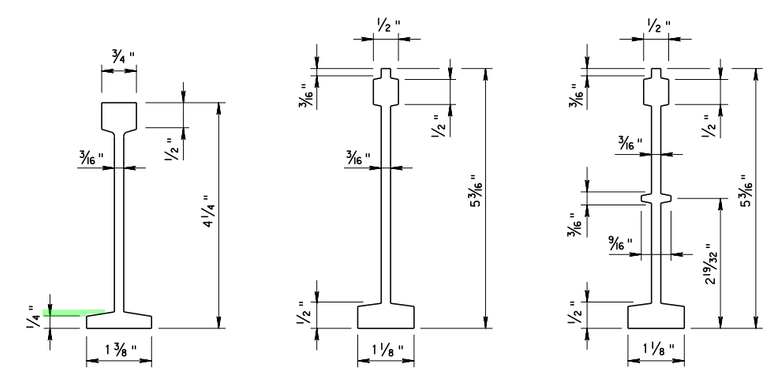

4 1/4" BAR WITHOUT MIDDLE RIB

5 3/16" BAR WITHOUT MIDDLE RIB

5 3/16" BAR WITH MIDDLE RIB

MAIN BEARING BAR

SUBJECT TO MILL TOLERANCE

GENERAL NOTES:

1. ALL REINFORCEMENT BARS TO MEET THE REQUIREMENTS OF PUB. 408 SECTION 709.1.
2. DESIGN SPECIFICATION:
   - AASHTO LRFD BRIDGE DESIGN SPECIFICATIONS AND COMMENTARY
   - PENNDOT DESIGN MANUAL PART 4
3. FABRICATION ACCORDING TO AASHTO/AWS D1.5 (DATE AS NOTED IN PUB. 408 SECTION 1105), BRIDGE GRID FLOORING MANUFACTURERS ASSOCIATION AND APPROVED SHOP DRAWINGS.
4. MATERIAL STRENGTH:
   - STEEL BARS AND SHAPES:
     - PUB. 408 SECTION 1105.2
   - CONCRETE:
     - PUB. 408 SECTION 704.1 (b), CLASS AAAP
5. PROVIDE 1½" CONCRETE COVER ON REINFORCEMENT BARS UNLESS OTHERWISE NOTED.
6. PROVIDE 1½" COVER OVER GRID. THE TOP ½" OF OVERFILL/OVERLAY IS CONSIDERED SACRIFICIAL WEARING SURFACE.
7. ALL SHEET METAL AND FORM PANS TO MEET PUB. 408, SECTION 1001.2 GALVANIZING REQUIREMENTS. PROVIDE FORM PANS ACCORDING TO PUB. 408, SECTION 1001.2(h)2.
8. PROVIDE AN ERECTION DETAIL COMPLETE WITH PIECE MARKS WITH THE SHOP DRAWING SUBMISSION.
9. PROVIDE A ¾" DIAMETER LEVELING BOLT THAT IS EITHER:
   ASTM A307 GRADE A HEADED BOLT OR EQUIVALENT.
   OR
   A WELDED ASSEMBLY CONSISTING OF THREADED ROD AND HEX NUT.
   - THREADED ROD: ASTM A307, ASTM F1554 GRADE 36, OR EQUIVALENT
   - HEX NUT: ASTM A194 OR ASTM A563.

   FURNISH LEVELING BOLTS UNCOATED UNLESS REQUIRED TO BE GALVANIZED

   SEE SHEET 4 FOR DETAILS
10. USE THE 5 3/16" MAIN BEARING BAR WITH OR WITHOUT THE MIDDLE RIB FOR FULL DEPTH CONCRETE DECKS.
11. HOT DIP GALVANIZE PANELS PER PUB.408, SECTION 1105.02(S).

COMMONWEALTH OF PENNSYLVANIA
DEPARTMENT OF TRANSPORTATION
BUREAU OF PROJECT DELIVERY

STANDARD

STEEL GRID REINFORCED CONCRETE BRIDGE DECK DETAILS FOR BEAM BRIDGES CAST-IN-PLACE OR PRECAST DECKS

RECOMMENDED JAN. 31, 2019	RECOMMENDED JAN. 31, 2019	SHEET 1 OF 5
Thomas P. Macioce CHIEF BRIDGE ENGINEER	Melvin Hubbard ACTING DIR. BUR. OF PROJECT DELIVERY	BC-726M

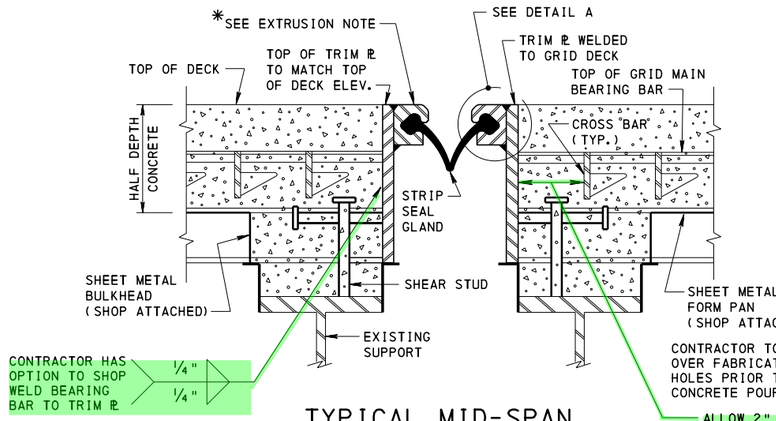

TYPICAL MID-SPAN EXPANSION JOINT DETAIL

WITH MAIN BEARING BARS PARALLEL TO STRUCTURE, HALF DEPTH CONCRETE GRID IS SHOWN. FULL DEPTH CONCRETE GRID SIMILAR WITH FORM PANS LOCATED AT BOTTOM FLANGE OF MAIN BEARING BAR.

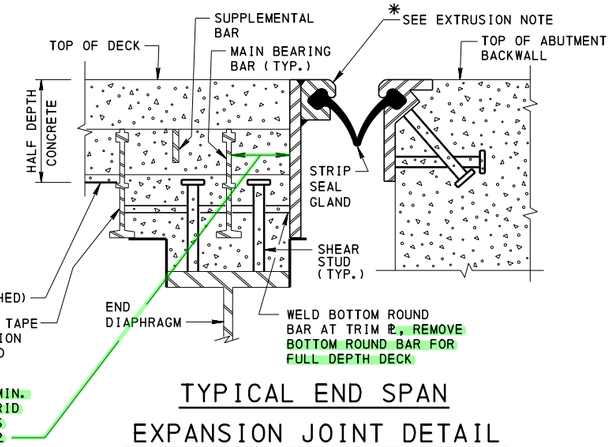

TYPICAL END SPAN EXPANSION JOINT DETAIL

WITH MAIN BEARING BARS PERPENDICULAR TO STRUCTURE, HALF DEPTH CONCRETE GRID IS SHOWN. FULL DEPTH CONCRETE GRID SIMILAR WITH FORM PANS LOCATED AT BOTTOM FLANGE OF MAIN BEARING BAR.

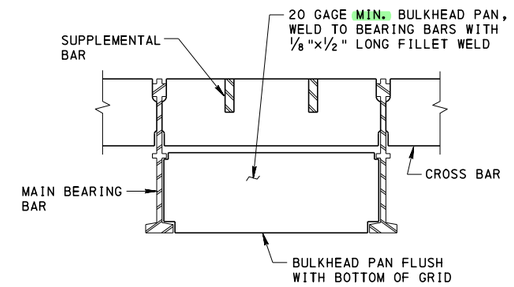

BULKHEAD PAN FIT-UP DETAIL

HALF DEPTH ONLY

* ONE PIECE EXTRUSION IN LIEU OF TWO PIECE MEMBER (EXTRUSION AND PLATE COMBINATION) IS PERMITTED. WELD IN ACCORDANCE WITH AASHTO/AWS D1.5M SPECIFICATIONS. (FULL PENETRATION WELD AND N.D.T. REQUIRED)

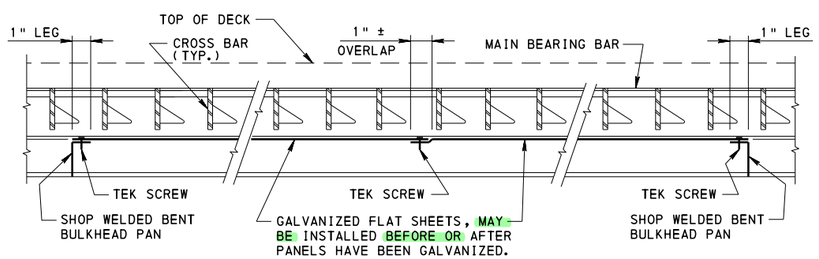

SECTION VIEW

HALF DEPTH CONCRETE GRID FORM PAN INSTALLATION DETAIL

FULL DEPTH GRID SIMILAR BUT WITHOUT THE BULKHEADS

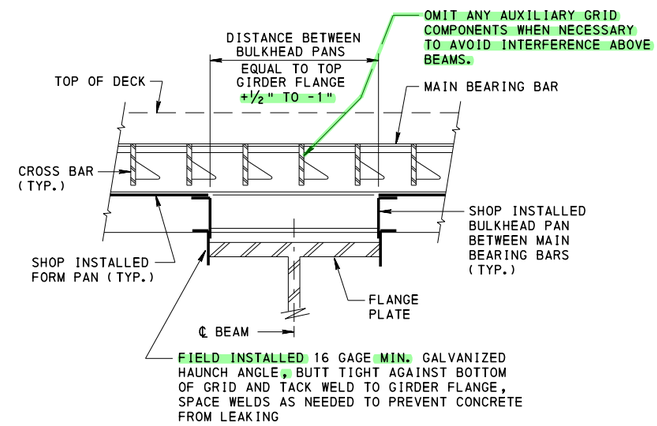

SECTION VIEW

TYPICAL HAUNCH FORM DETAIL

INSTALLATION NOTES:

1. DURING PLACEMENT OF THE GRID PANELS THE CONTRACTOR MUST PLACE EACH PANEL IN ITS PROPER POSITION AND VERIFY ITS LOCATION FROM A COMMON FIXED POINT. DOING SO WILL MINIMIZE CUMULATIVE PLACEMENT ERRORS. CUMULATIVE ERRORS CAN RESULT IN A TOTAL DECK AREA LARGER OR SMALLER THAN THE ACTUAL AREA TO BE FILLED.
2. PANELS WITH THE SAME ERECTION MARK ARE INTERCHANGEABLE.
3. AS WITH OTHER DECKS THIS IS NOT A LEAK PROOF BRIDGE DECK SYSTEM AND MINOR CONCRETE AND GROUT SEEPAGE MAY OCCUR. FIELD CAULKING BY THE DECK ERECTOR MAY BE REQUIRED TO PREVENT EXCESSIVE CONCRETE AND GROUT LEAKAGE.
4. PANEL WIDTHS SHOWN ARE NOMINAL. ADJUST DIMENSION BETWEEN BEARING BARS AT FIELD JOINT TO ACCOUNT FOR TEMPERATURE AND ANY OTHER CONDITIONS AT THE TIME OF INSTALLATION.
5. FIELD INSTALL SHEAR STUDS AFTER PANELS ARE PLACED TO AVOID INTERFERENCE WITH GRID COMPONENTS.
6. HAVE AN EXPERIENCED REPRESENTATIVE OF MANUFACTURER PRESENT DURING INITIAL INSTALLATION OF GRID DECKING AND AT SUCH OTHER TIMES AS THE ENGINEER MAY REQUEST.

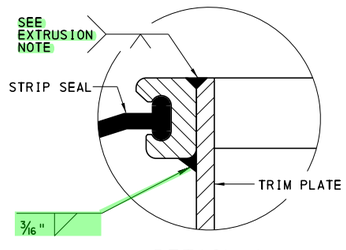

DETAIL A

EXTRUSION NOTE: ONE PIECE EXTRUSION IN LIEU OF TWO PIECE MEMBER (EXTRUSION AND PLATE COMBINATION) IS PERMITTED. WELD IN ACCORDANCE WITH AASHTO/AWS D1.5M SPECIFICATIONS.

COMMONWEALTH OF PENNSYLVANIA
DEPARTMENT OF TRANSPORTATION
BUREAU OF PROJECT DELIVERY

STANDARD

STEEL GRID REINFORCED CONCRETE BRIDGE DECK DETAILS FOR BEAM BRIDGES CAST-IN-PLACE OR PRECAST DECKS

RECOMMENDED JAN. 31, 2019 Thomas P. Macioce CHIEF BRIDGE ENGINEER	RECOMMENDED JAN. 31, 2019 Michael J. Bahl ACTING DIR. BUR. OF PROJECT DELIVERY	SHEET 2 OF 5 BC-726M

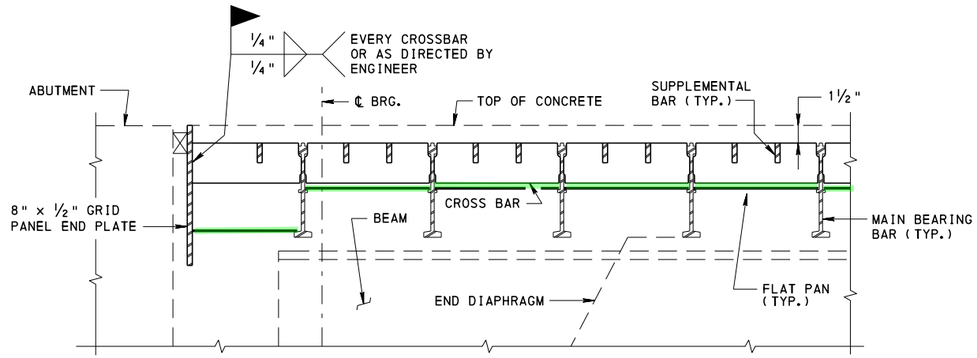

END SECTION DETAIL

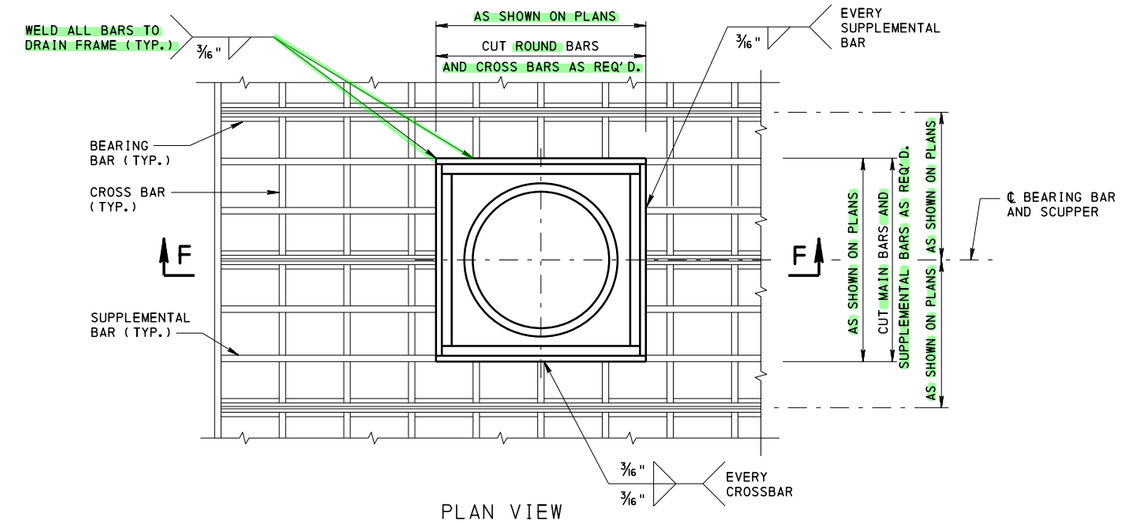

PLAN VIEW

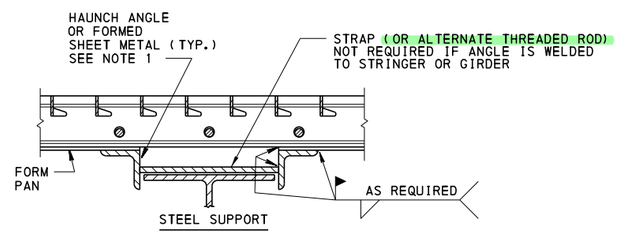

FORMED ANGLE - WELDED STRAP

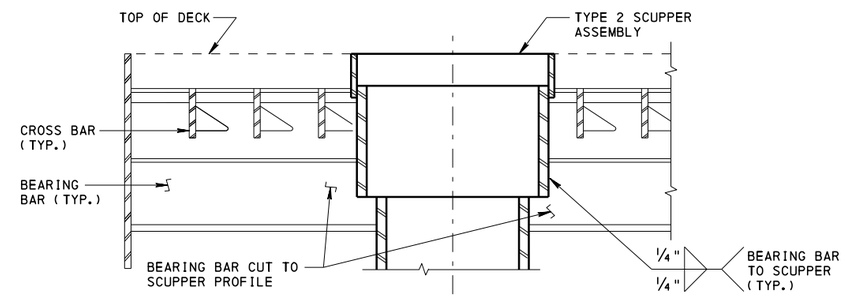

SECTION F-F

SCUPPER INSTALLATION DETAILS

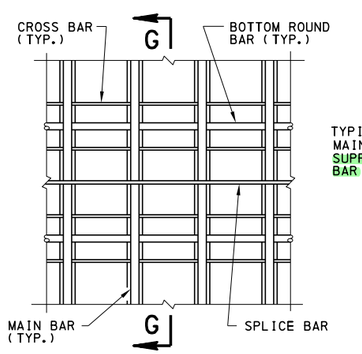

SPLICE BAR PLAN VIEW

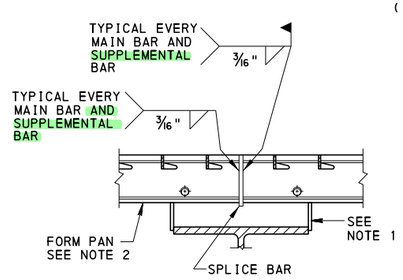

SECTION G-G

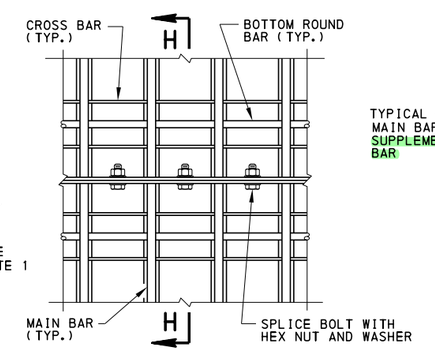

BOLTED PLAN VIEW

NOTE: ALL HARDWARE MUST BE IN ACCORDANCE WITH PUB. 408, SECTION 1105.02

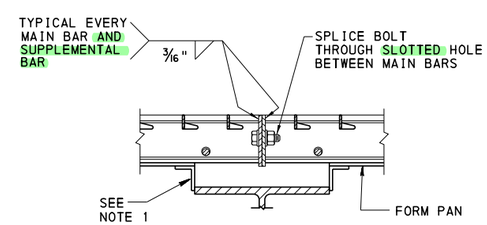

SECTION H-H

MAIN BAR SPLICE AT PANEL ENDS

HAUNCH NOTES:
1. HAUNCH ANGLES NOT TO BE WELDED TO TENSION MEMBERS. USE TIE STRAPS WELDED BETWEEN HAUNCH ANGLES.
2. OMIT CONCRETE FORM PAN OVER SUPPORT MEMBERS.

COMMONWEALTH OF PENNSYLVANIA
DEPARTMENT OF TRANSPORTATION
BUREAU OF PROJECT DELIVERY

STANDARD

STEEL GRID REINFORCED CONCRETE BRIDGE DECK DETAILS FOR BEAM BRIDGES CAST-IN-PLACE OR PRECAST DECKS

RECOMMENDED JAN. 31, 2019	RECOMMENDED JAN. 31, 2019	SHEET 3 OF 5
Thomas P. Macioce CHIEF BRIDGE ENGINEER	ACTING DIR. BUR. OF PROJECT DELIVERY	BC-726M

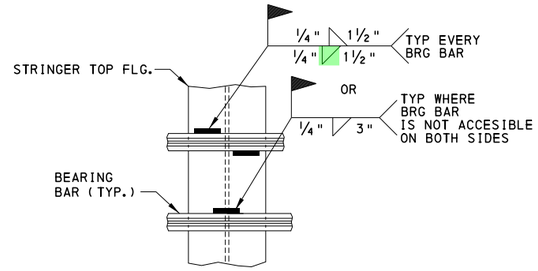

OPTIONAL FIELD WELD DETAIL WITHOUT HAUNCH

FIELD NOTE: AFTER FIELD WELDING OF DECK, REPAIR ANY DAMAGE TO GALVANIZING. BY APPLYING A ZINC RICH COLD APPLIED COATING TO DAMAGE AREA.

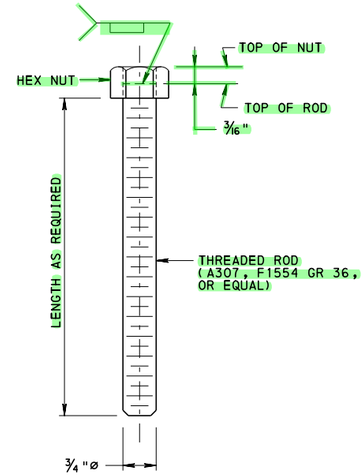

LEVELING BOLT DETAIL

- HEADED BOLT IS PERMITTED IN LIEU OF NUT TO THREADED ROD WELDED ASSEMBLY.
- LEVELING BOLTS MAY BE FURNISHED UNCOATED.

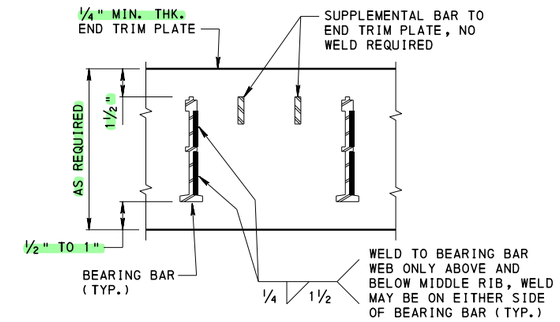

END TRIM PLATE WELD DETAIL

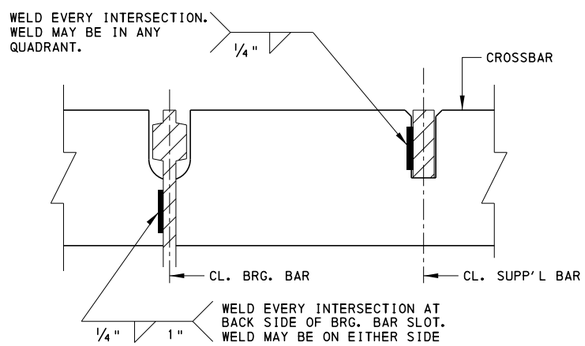

GRID COMPONENT WELD DETAILS

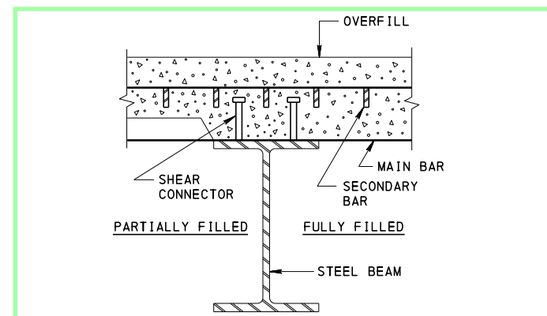

SHEAR CONNECTION AT PARTIALLY AND FULLY FILLED GRID DECKS

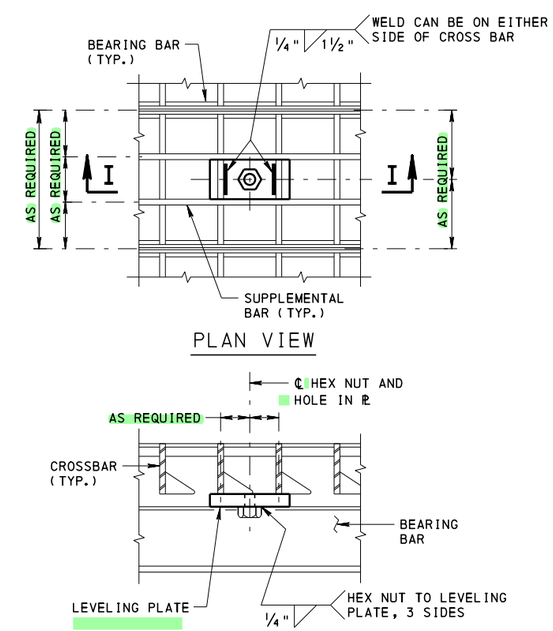

LEVELING PLATE WELD DETAIL

- HEX NUT CAN BE TAPPED OVERSIZE FOR GALVANIZING.
- THE LEVELING NUT MAY BE PLACED UNDER THE MAIN BAR WHEN CONDITIONS PERMIT. ALTERNATE LEVELING DETAILS PERMITTED AS APPROVED BY THE DISTRICT BRIDGE ENGINEER.

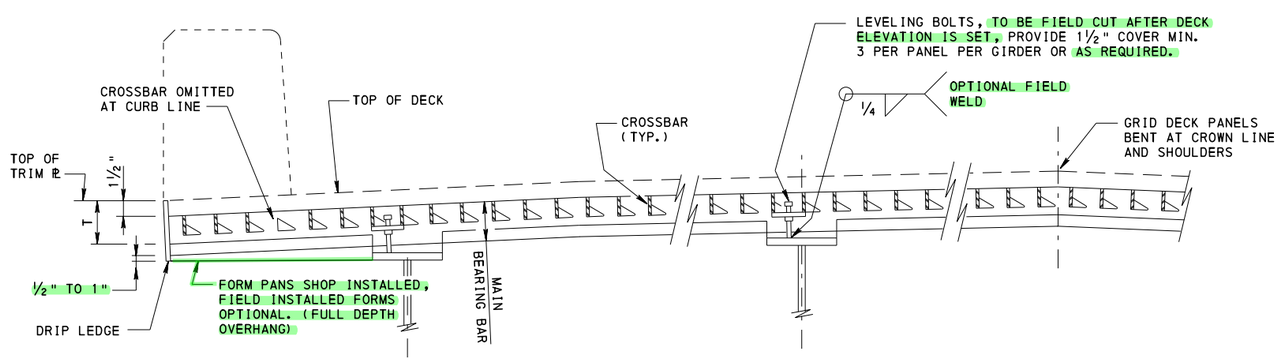

SECTION VIEW

PARTIAL TRANSVERSE SECTION THRU GRID DECK

MAIN BAR CAMBERING AS PERMITTED BY AWS D1.5 PUB.408

COMMONWEALTH OF PENNSYLVANIA
DEPARTMENT OF TRANSPORTATION
BUREAU OF PROJECT DELIVERY

STANDARD

STEEL GRID REINFORCED CONCRETE BRIDGE DECK DETAILS FOR BEAM BRIDGES CAST-IN-PLACE OR PRECAST DECKS

RECOMMENDED JAN. 31, 2019 Thomas P. Macioce CHIEF BRIDGE ENGINEER	RECOMMENDED JAN. 31, 2019 Alvin J. Baker ACTING DIR. BUR. OF PROJECT DELIVERY	SHEET 4 OF 5 BC-726M

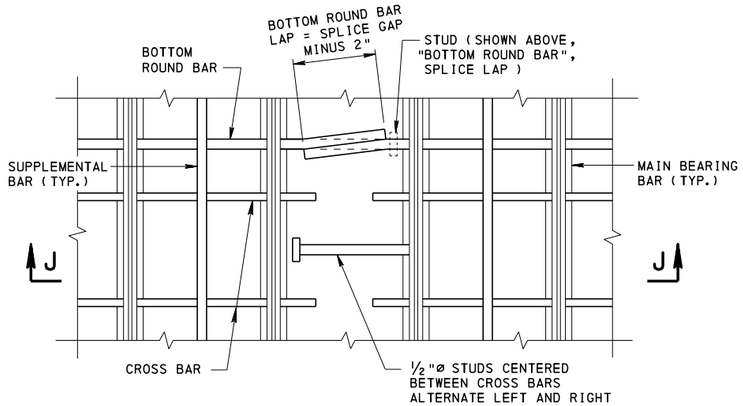

PLAN VIEW

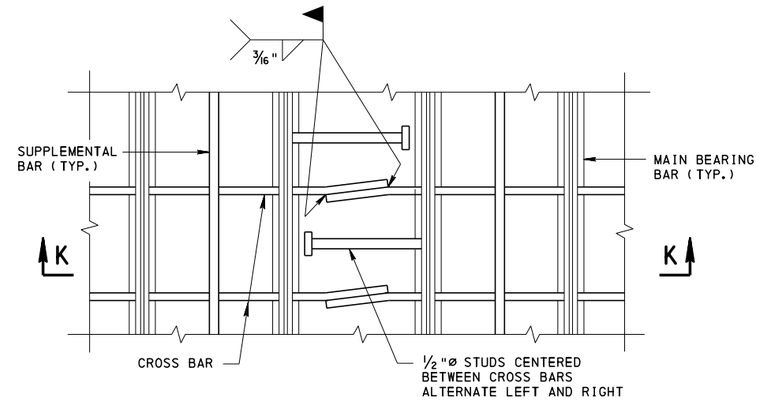

PLAN VIEW

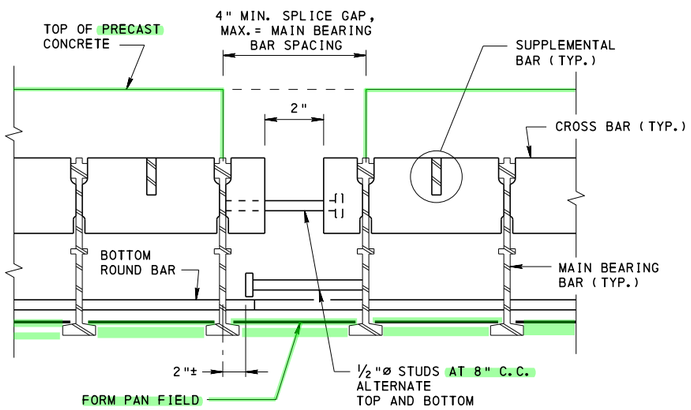

SECTION J-J

FULL DEPTH CONCRETE GRID
TRANSVERSE SPLICE BETWEEN PANELS

OPTIONAL BOLTED SPLICE PERMITTED AS APPROVED BY THE DISTRICT BRIDGE ENGINEER

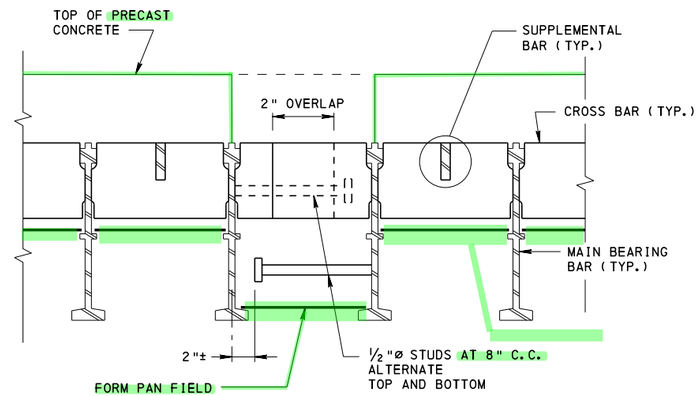

SECTION K-K

HALF DEPTH CONCRETE GRID
TRANSVERSE SPLICE BETWEEN PANELS

OPTIONAL BOLTED SPLICE PERMITTED AS APPROVED BY THE DISTRICT BRIDGE ENGINEER

NOTE: SPLICE DETAILS CAN ALSO BE USED FOR CAST-IN-PLACE WITHOUT BLOCKOUT CLOSURE POURS.

COMMONWEALTH OF PENNSYLVANIA
DEPARTMENT OF TRANSPORTATION
BUREAU OF PROJECT DELIVERY

STANDARD

STEEL GRID REINFORCED CONCRETE BRIDGE DECK DETAILS FOR BEAM BRIDGES PRECAST DETAILS

RECOMMENDED JAN. 31, 2019	RECOMMENDED JAN. 31, 2019	SHEET 5 OF 5
Thomas P. Macioce CHIEF BRIDGE ENGINEER	ACTING DIR. BUR. OF PROJECT DELIVERY	BC-726M